Walter Bethke GmbH & Co. KG

Technische Kunststoff - und Hybridprodukte

Product Group BGUD

U-handle made of PA-GF with cover cap

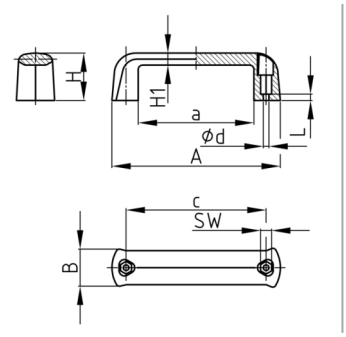

Standard Colours

- black

Material

- Base body: glass fibre reinforced polyamide (PA-GF)
- Top cover: Polypropylene (PP)

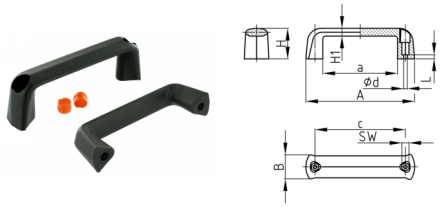

Order Number	A	a	B	c	d	H	H1	L	WAF
	mm	mm	mm	mm	mm	mm	mm	mm	mm
BGUD 117 / d 6,5	141	94	27	117	6,5	44	9	6,5	10
BGUD 117 / d 8,5	141	94	27	117	8,5	44	9	6,5	13